RAASM S.p.a.
Via Marangoni 33, 36022
S. Zeno di Cassola (VI) Italy
Tel. +39 0424 570891
info@raasm.com

ADVANCED FLUID MANAGEMENT SOLUTIONS

P/N 1524835

Motor operated pump s. C15B18 for grease 24 V DC, remote control with 4 pumping elements, 5 litres reservoir, min level indicator and solenoid valve

AREAS OF USE

Aeronautics, Agriculture, Building and road construction, Chemical industry, Manufacturing industry, Mining industry, Centralized lubrication, Shipping and offshore, Railway transport

FEATURES

Flow rate	17,08 cm3/min
Tank capacity	5 l
Reducer ratio	-
Lubricant inlet connection	by hydraulic greaser
Lubricant outlet connection	G 3/8" (f)
N° of pistons	4
Working temperature	-25 ÷ +60 °C
Compatible fluids	grease max NLGI 2
Supply	24 V DC
Protection degree	IP55
Velocity	-
Packing	No. 1 - 0,033 m3
Net weight	6,2 kg
Gross weight	7,1 kg
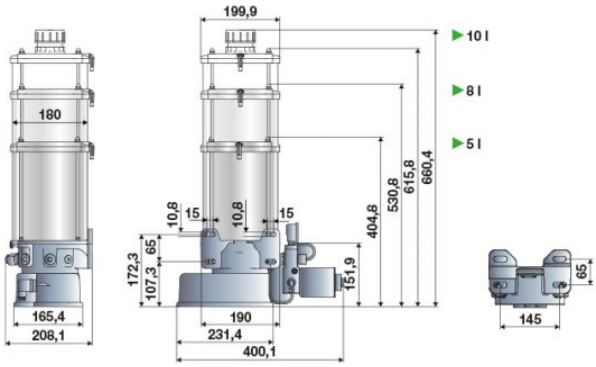
OVERALL DIMENSIONS (mm)